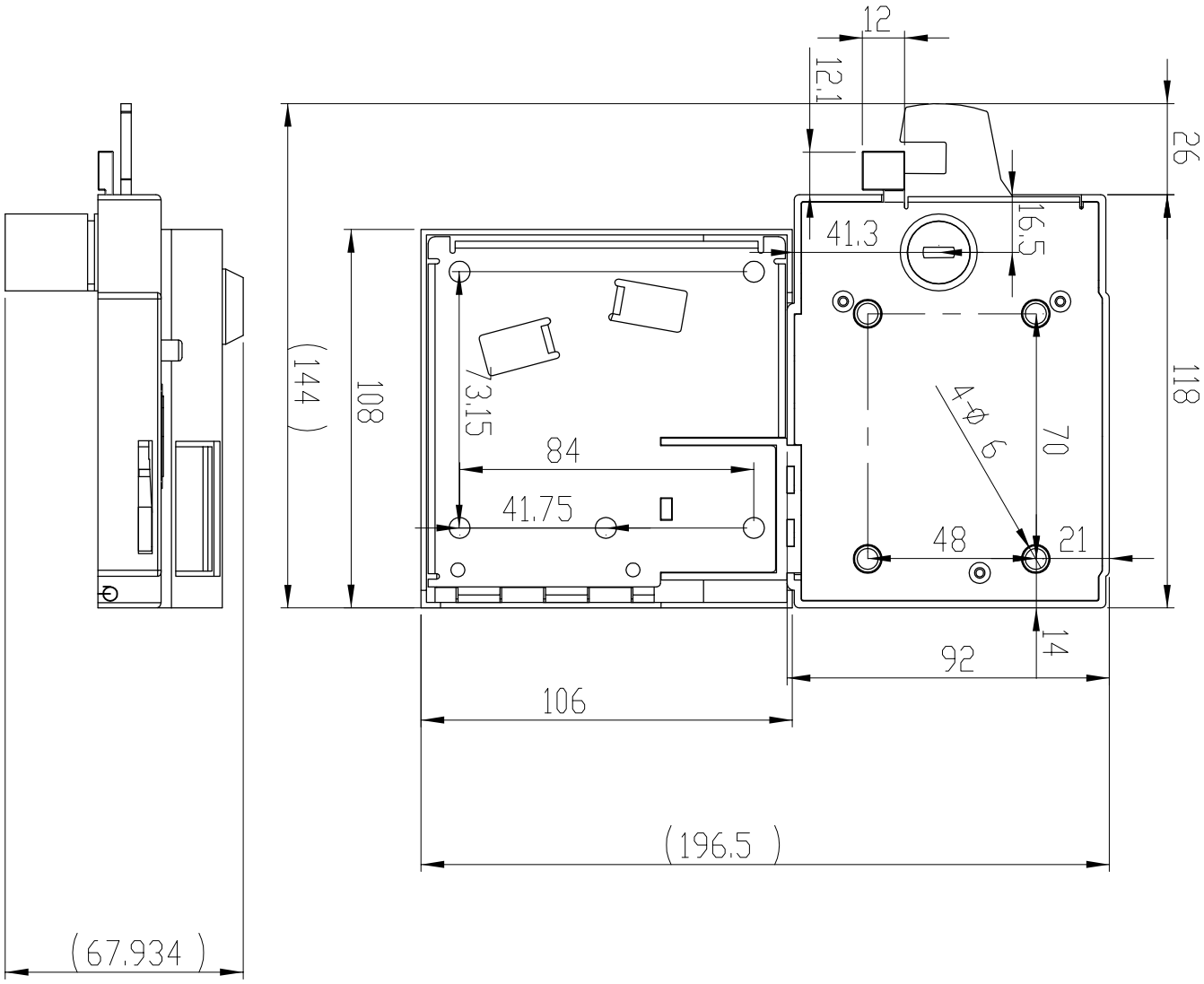
12
12.1
26
16.5
41.3
118
(144)
108
3.15
84
41.75
4-φ6
70
48
21
14
92
106
(196.5)
(67.934)

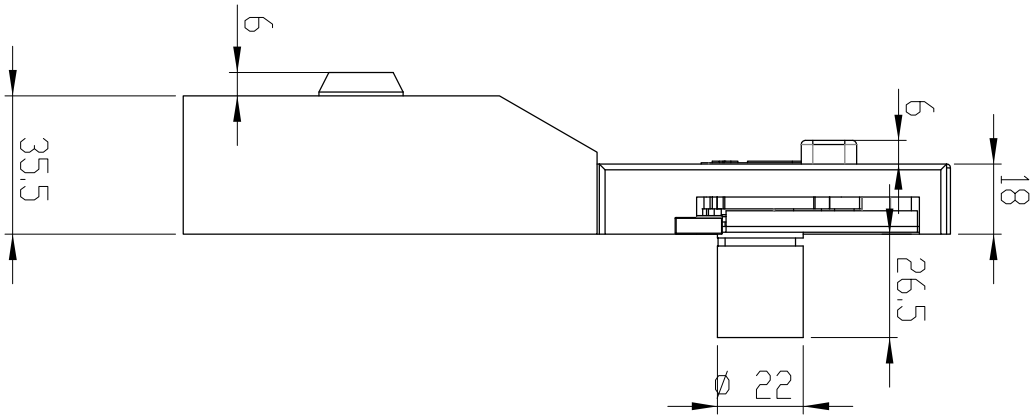
6
35.5
6
18
26.5
φ 22